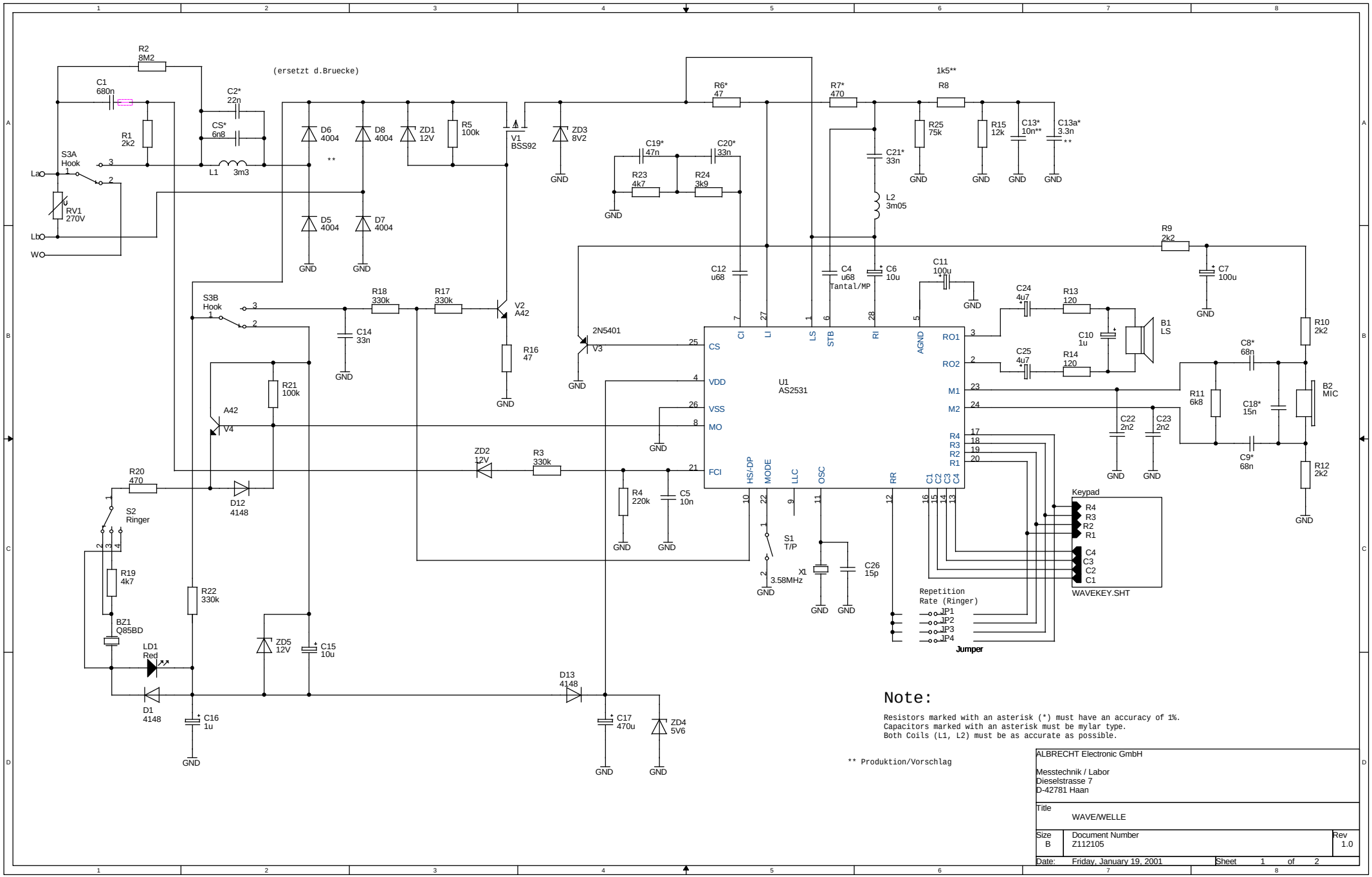

Note:

Resistors marked with an asterisk (*) must have an accuracy of 1%.
Capacitors marked with an asterisk must be mylar type.
Both Coils (L1, L2) must be as accurate as possible.

** Produktion/Vorschlag

ALBRECHT Electronic GmbH Messtechnik / Labor Dieselstrasse 7 D-42781 Haan		
Title WAVE/WELLE		
Size B	Document Number Z112105	Rev 1.0
Date: Friday, January 19, 2001	Sheet 1 of 2	

(C) 1995 by Albrecht Electronic GmbH
designed by axel koruschowitz

File: WAVEPROD.SHT