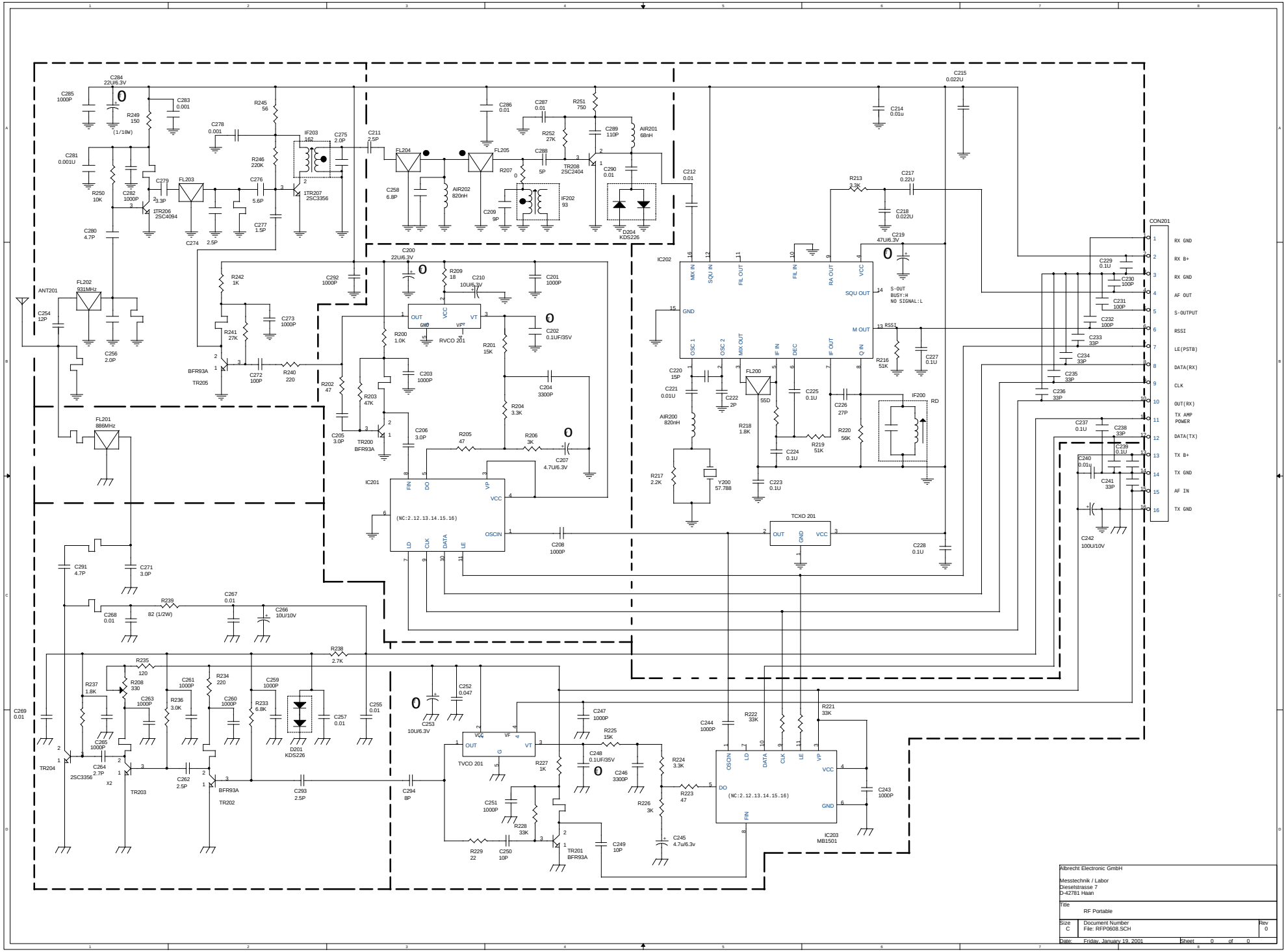

Albrecht Electronic GmbH

Messtechnik / Labor
Dieselstrasse 7
D-42781 Haan

Title: RF Portable

Size	Document Number	Rev
C	File: RFP0608.SCH	0

Date: Friday, January 19, 2001 Sheet 0 of 0